ClearPour
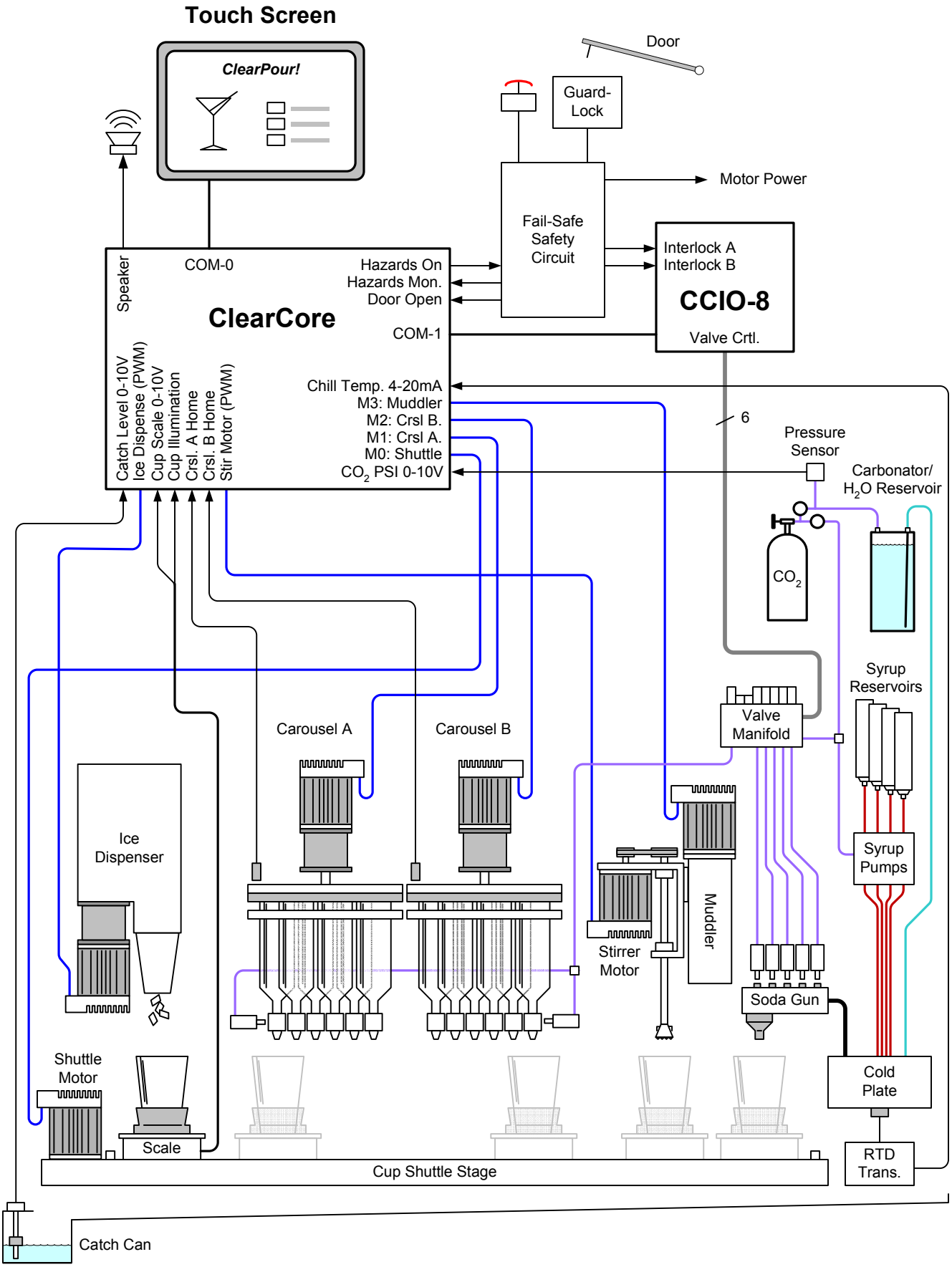
Block Diagram